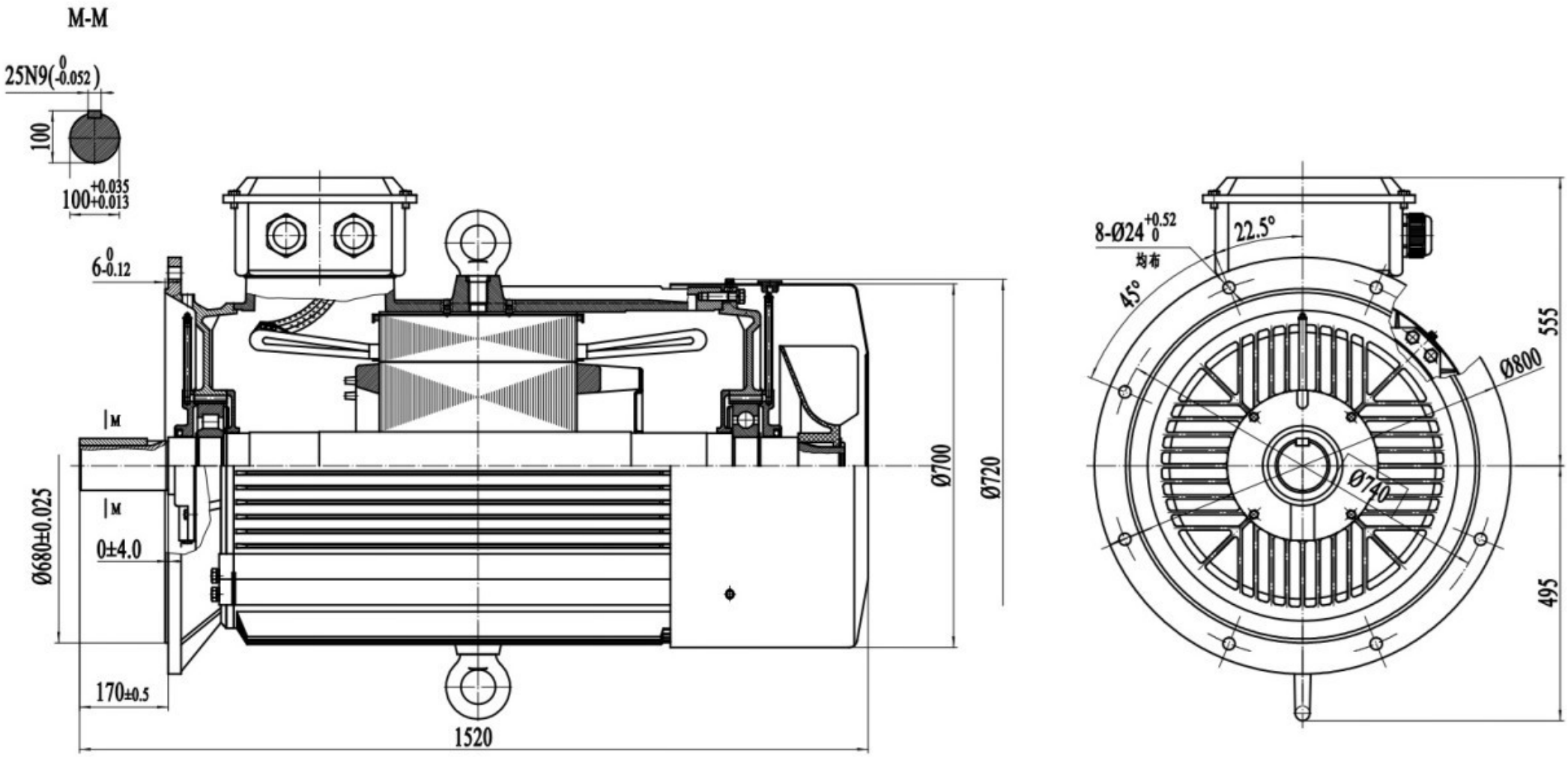
M-M
25N9(0 -0.052)
100
100+0.035 +0.013
6-0 -0.12
|M
|M
Ø680±0.025
0±4.0
170±0.5
1520
Ø700
Ø720
8-Ø24+0.52 0
均布
22.5°
45°
Ø800
Ø740
555
495