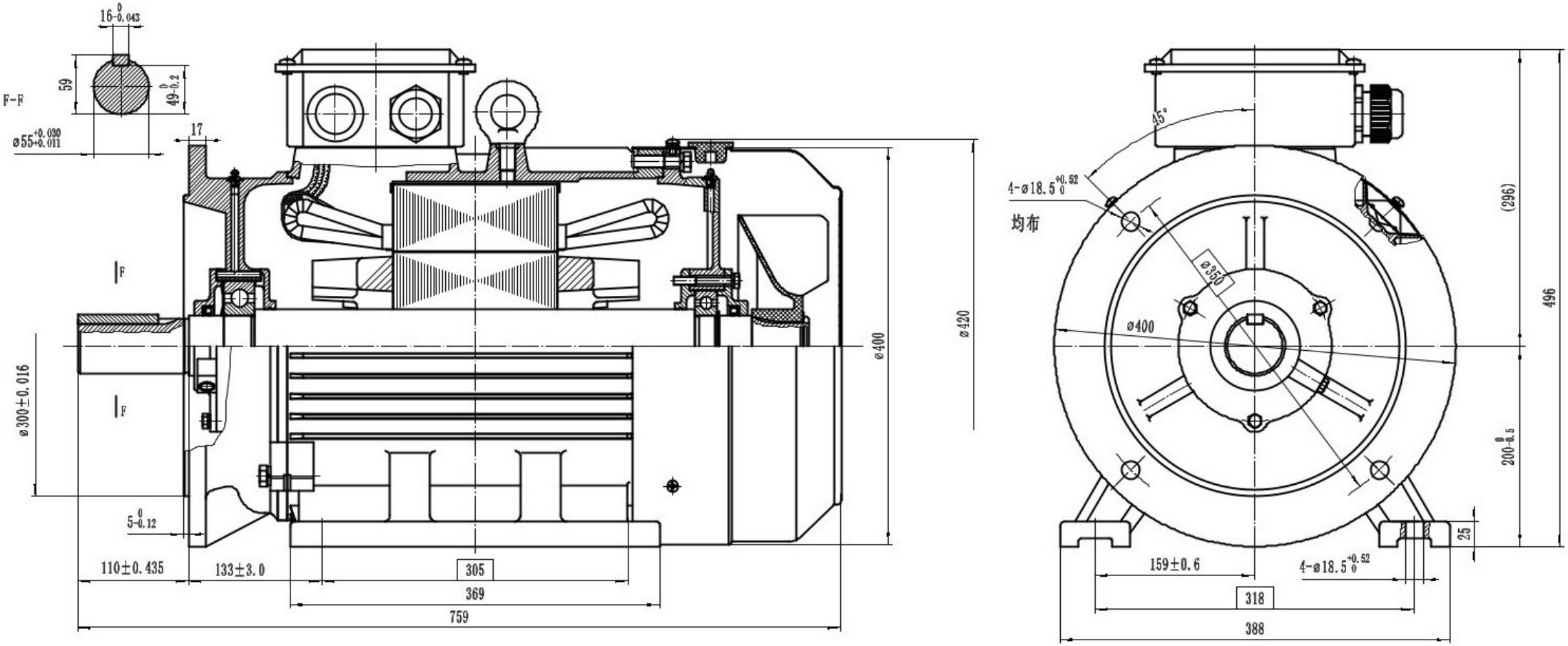
16-0.043
59
49-0.2
F-F
ø55+0.030 +0.011
17
F
F
ø300±0.016
5-0.12
110±0.435
133±3.0
305
369
759
ø400
ø420
45°
4-ø18.5+0.52 0
均布
ø350
ø400
(296)
496
200-0.5
25
159±0.6
4-ø18.5+0.52 0
318
388