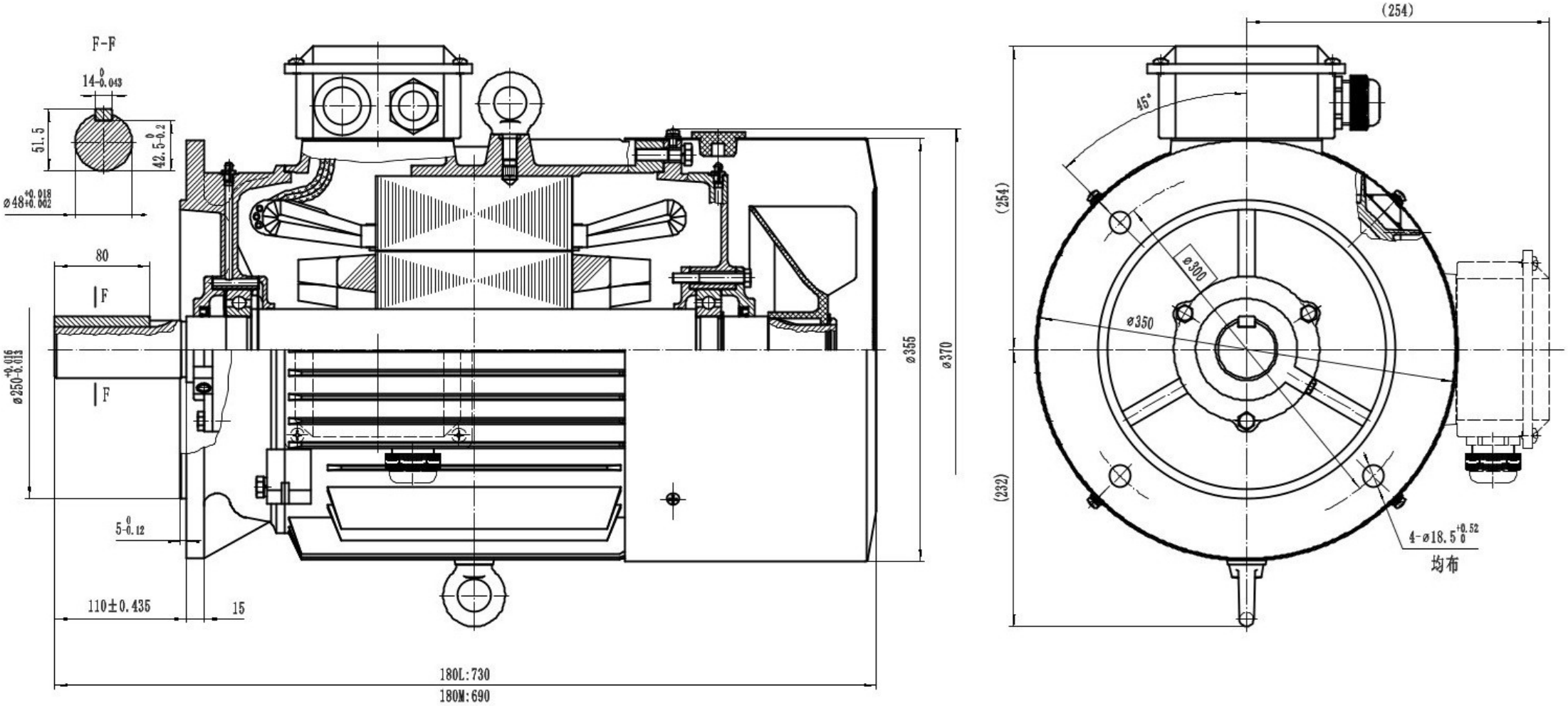
F-F
14-0.043
51.5
42.5-0.2
ø48+0.018 +0.002
80
F
F
ø250-0.016 -0.013
5-0.12
110±0.435
15
ø355
ø370
180L:730
180M:690
(254)
45°
(254)
ø300
ø350
(232)
4-ø18.5 +0.52 0
均布