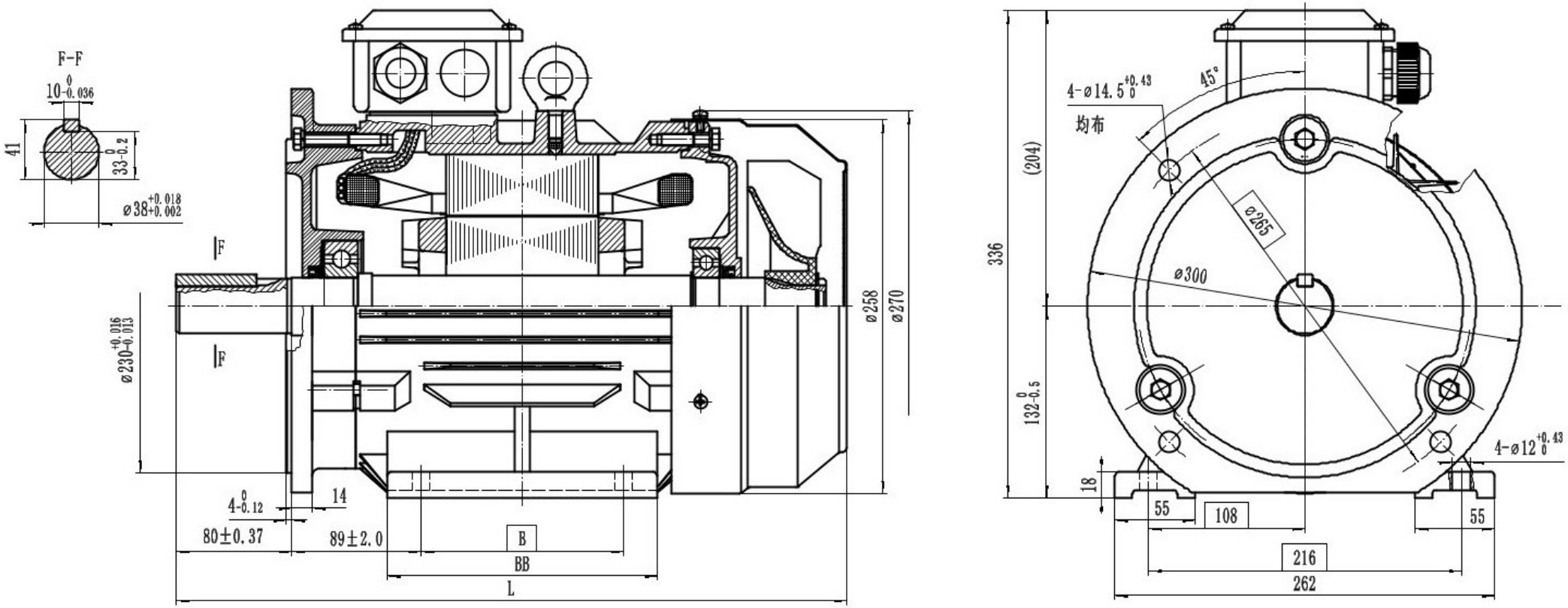
F-F
10 0 -0.036
41
33 0 -0.2
ø38 +0.018 +0.002
F
F
ø230 +0.016 -0.013
4 0 -0.12
14
80±0.37
89±2.0
B
BB
L
ø258
ø270
4-ø14.5 +0.43 0
均布
45°
(204)
336
ø265
ø300
132 0 -0.5
4-ø12 +0.43 0
18
55
108
55
216
262