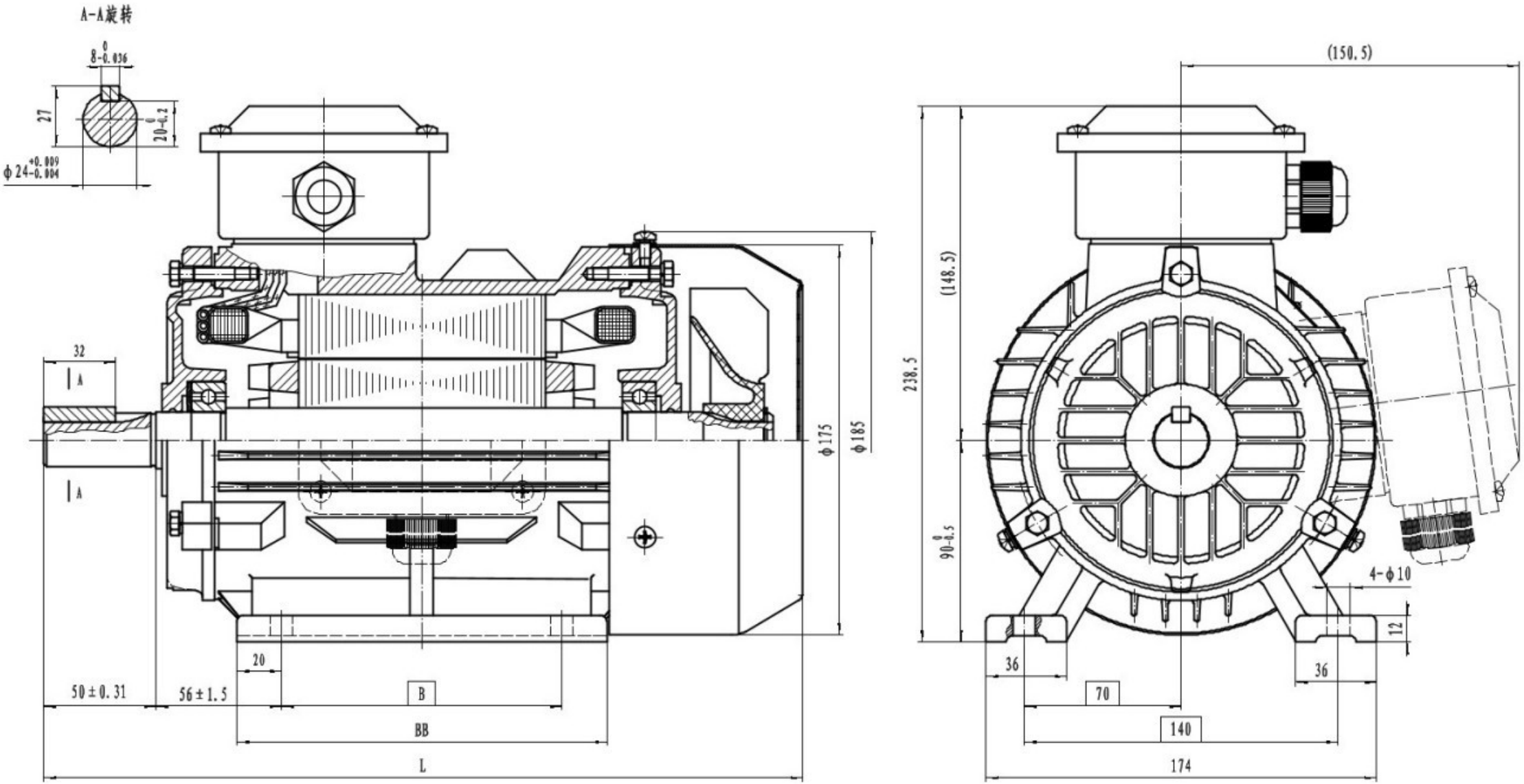
A-A旋转
8-0.036
27
20-0.2
φ24+0.009-0.004
32
A
A
φ175
φ185
20
50±0.31
56±1.5
B
BB
L
(150.5)
(148.5)
238.5
90-0.5
4-φ10
12
36
36
70
140
174